REV	DESCRIPTION OF REVISION	ECN NO.	BY	DATE	APPROVED
A	Initial Release	———	T. Shihua	12/7/13	12/7/13

This document contains proprietary information and such informationmay not be disclosed to others for any purposes, not used for sales/marketing/procurement purposes without written permission

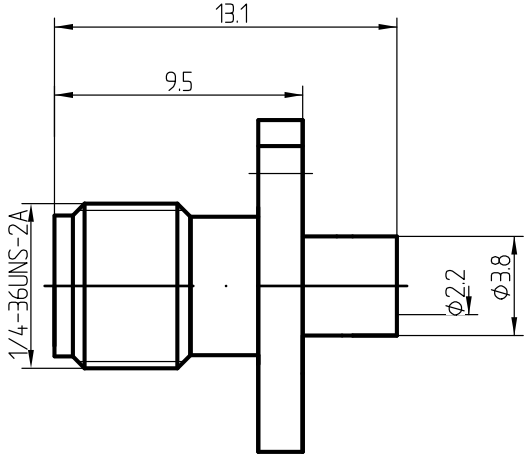

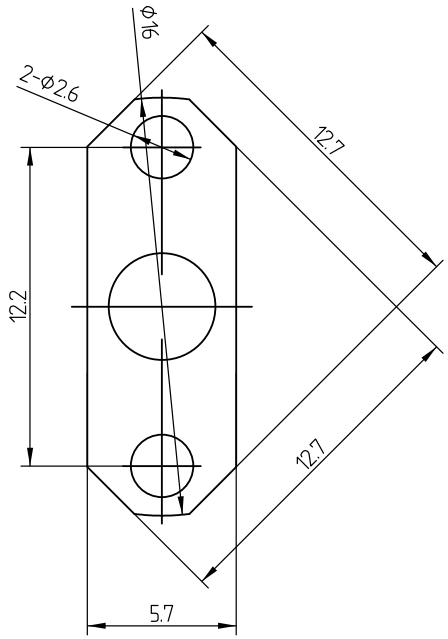

1 Electrical

1.1 Impedence	50 Ω
1,2 Frequency	DC~6GHz
1.2 Dielectric withstanding voltage	1000V(volts RMS)
1.3 Center contact resistance	≤ 3MΩ
1.4 Outer contact resistance	≤ 2MΩ
1.5 Insulation resistance:	≥5000MΩ

2 Environmental&Mechanical

2.1 Temperature range	-45℃~85℃
2.2 RoHs Compliant	
2.3 Durability	>500 cycles

3 Materials&plating

3.1 Body:	Brass, Gold plated
3.2 Insulator:	Teflon
3,3 Contact Pin:	Beryllium Copper Gold plated

Notes:

1. ALL SPECIFICATIONS ARE SUBJECT TO CHANGE NOTICE AT ANY TIME
2. CUSTOMER OUTLINE DRAWING FOR REFERENCE ONLY

DRAWN : T. Shihua 12/07/13

ENGINEER: C. Tao 12/07/13

APPROVED : W. Qiang 12/07/13

TOLERANCES UNLESS OTHERWISE SPEFICIED
X ±0.50
.X ±0.20
.XX ±0.10
ANGLES ±1°

TITLE:

RF Coaxial Connector

SMA Female flange
Conn. For .086 Cable

PART NO: SMA-KFB2

TRL ®
www.trl-rf.com

DIMENSION IN MILLIMETERS (mm)

SIZE:	SCALE:	SHEET:	REV:
A4	N/A	1/1	A