This document contains proprietary information and such informationmay not be disclosed to others for any purposes, not used for sales/marketing/procurement purposes without written permission

REV	DESCRIPTION OF REVISION	TRL NO.	BY	DATE	APPROVED
A	Initial Release	———	T.Shihua	22/10/2022	22/10/2022

1 Electrical

1.1 Impedance: 50Ω
1.2 Frequency: DC～40 GHz
1.3 VSWR:≤1.30
1.4 Insulation resistance: ≥5000MΩ
1.5 Dielectric strength: 1000V
1.6 Center contact ≤ 3.0mΩ
1.7 Outer contact ≤ 2.0mΩ

2 Environmental&Mechanical

2.1 Temperature range: -55℃～+125℃
2.2 RoHs Compliant
2.3 Durability: >500 cycles

3 Materials&Finish

3.1 Body: Brass, Gold plated
3.2 Insulator: Teflon
3.3 Contact Pin: Beryllium-Copper,Gold plated

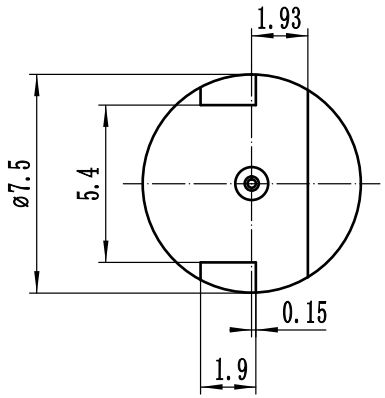

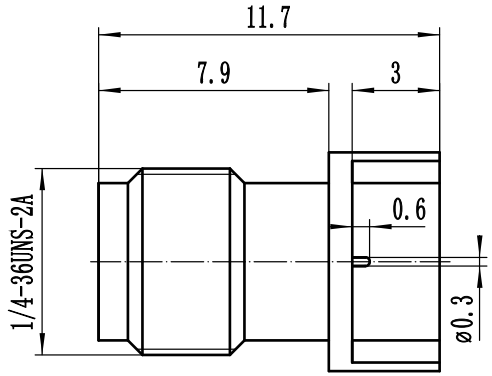

Notes:

1. ALL SPECIFICATIONS ARE SUBJECT TO CHANGE NOTICE AT ANY TIME
2. CUSTOMER OUTLINE DRAWING FOR REFERENCE ONLY

DRAWN:	T.Shihua 22/10/2022
ENGINEER:	C.Tao 22/10/2022
APPROVED:	W.Qiang 22/10/2022

TOLERANCES UNLESS OTHERWISE SPEFICIED
X ±0.50
.X ±0.20
.XX ±0.10
ANGLES ±1°

TITLE
RF Coaxial Connector
2.92 Female Connector Solder Attachment PCB

PART NO: 2.92-KHDC2

www.rf-connector-china.com

DIMENSION IN MILLIMETERS (mm)

SIZE:	SCALE:	SHEET:	REV:
A4	4:1	1/1	VA