This document contains proprietary information and such informationmay not be disclosed to others for any purposes, not used for sales/marketing/procurement purposes without written permission

REV	DESCRIPTION OF REVISION	TRL NO.	BY	DATE	APPROVED
A	Initial Release	———	T.Shihua	17/02/2022	17/02/2022

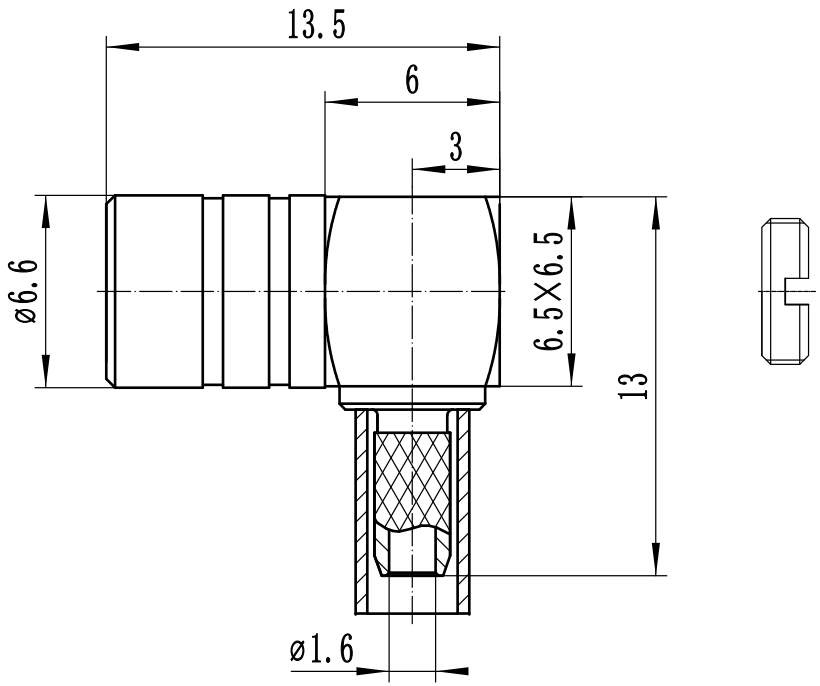

1 Electrical

1.1 Impedence	50Ω
1.2 Frequency	DC～4GHz
1.3 VSWR	1.30：1

2 Environmental&Mechanical

2.1 Temperature range	-45℃～125℃
2.2 RoHs Compliant	
2.3 Durability	>500 cycles

3 Materials&plating

3.1 Body:	Brass, Gold plated
3.2 Insulator:	Teflon
3,3 Contact Pin:	Beryllium-copper,Gold plated

Recommended cable stripping dimensions

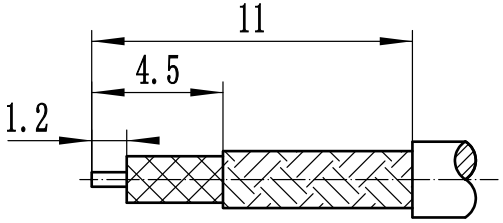

Notes:

1. ALL SPECIFICATIONS ARE SUBJECT TO CHANGE NOTICE AT ANY TIME
2. CUSTOMER OUTLINE DRAWING FOR REFERENCE ONLY

DRAWN:	T.Shihua 17/02/2022
ENGINEER:	C.Tao 17/02/2022
APPROVED:	W.Qiang 17/02/2022

TOLERANCES UNLESS OTHERWISE SPEFICIED

X	±0.50
.X	±0.20
.XX	±0.10
ANGLES	±1°

TITLE

RF Coaxial Connector

SMB Female Right-angle for RG316 cable

PART NO: SMB-KW3Y-1A

www.rf-connector-china.com

DIMENSION IN MILLIMETERS (mm)

SIZE:	SCALE:	SHEET:	REV:
A4	4:1	1/1	VA