REV	DESCRIPTION OF REVISION	ECN NO.	BY	DATE	APPROVED
A	Initial Release	———	T.Shihua	17/12/14	17/12/14

This document contains proprietary information and such informationmay not be disclosed to others for any purposes, not used for sales/marketing/procurement purposes without written permission

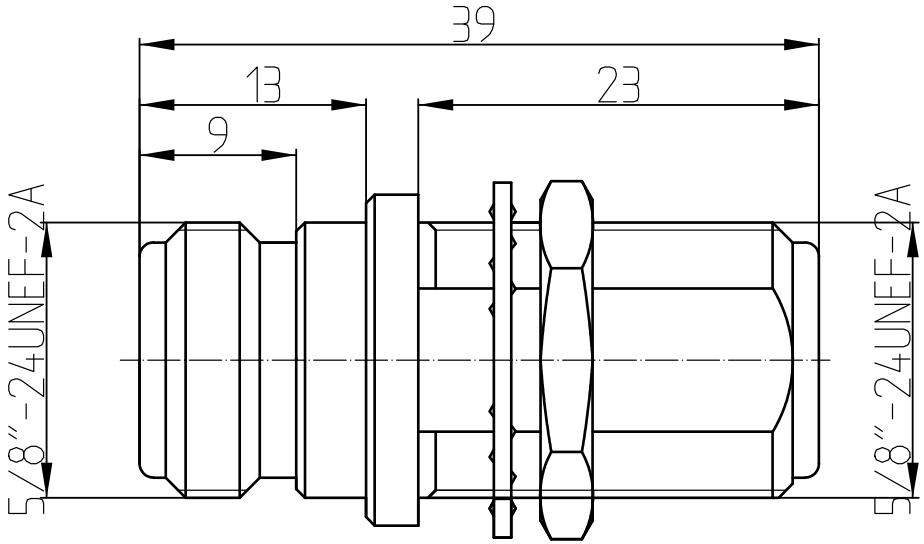

Mounting Hole

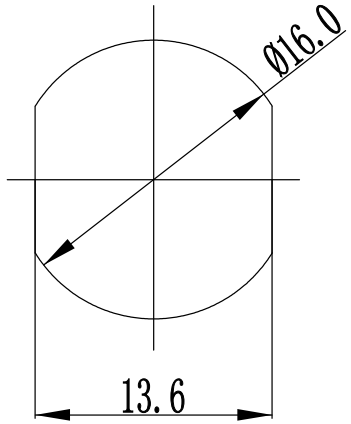

1 Electrical

1.1Impedance: 50 Ω

1.2Frequency:0-11GHz

2 Environmental

2.1 Temperature -45° to 125°

2.2 RoHs compliant

3 Material&Finish

3.1 Inner Contact: Phosphor Bronze, gold plated

3.2 Outer Contact: brass, nickel plated

3.3 Insulators: PTFE

3.4 Nut: Brass, nickel plated

3.5 Washer: Bronze, nickel plated

Notes:

1. ALL SPECIFICATIONS ARE SUBJECT TO CHANGE NOTICE AT ANY TIME

2. CUSTOMER OUTLINE DRAWING FOR REFERENCE ONLY

DRAWN : T.Shihua 17/12/14

ENGINEER: C.Tao 17/12/14

APPROVED : W.Qiang 17/12/14

TOLERANCES UNLESS OTHERWISE SPEFICIED
X ±0.50
.X ±0.20
.XX ±0.10
ANGLES ±1°

TITLE:

RF Coaxial Connector
N Female to Female Bulkhead adapter

PART NO: N-KYK3

www.trl-rf.com

DIMENSION IN MILLIMETERS (mm)

SIZE:	SCALE:	SHEET:	REV:
A4	N/A	1/1	A