REV	DESCRIPTION OF REVISION	ECN NO.	BY	DATE	APPROVED
A	Initial Release	——	T.Shihua	09/07/15	09/07/15

This document contains proprietary information and such informationmay not be disclosed to others for any purposes, not used for sales/marketing/procurement purposes without written permission

1 Electrical

1.1 Impedence	50Ω
1.2 Frequency	DC-4GHz
1.3 Dielectric withstanding voltage	1000V(volts RMS)
1.4 Center contact resistance	≤ 3MΩ
1.5 Outer contact resistance	≤ 2MΩ
1.6 Insulation resistance:	≥5000MΩ

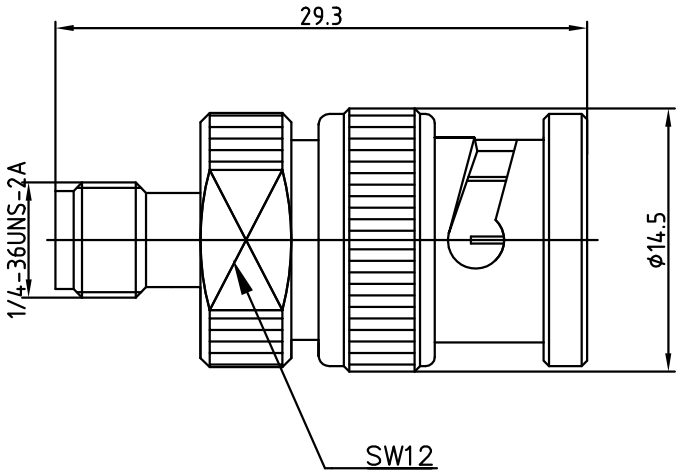

2 Environmental&Mechanical

2.1 Temperature range	-65℃~165℃
2.2 RoHs Compliant	
2.3 Durability	>500 cycles

3 Materials&plating

3.1 Body: Brass, Nickel plated
3.2 Insulator: Teflon
3,3 Contact Pin: Phosphor Bronze, Gold plated
3.4 Coupling Nut: Brass, nickel plated
3.5 Washer: bronze, nickel plated
3.6 Gasket: Silicon rubber(red color)

Notes:

1.ALL SPECIFICATIONS ARE SUBJECT TO CHANGE NOTICE AT ANY TIME

2.CUSTOMER OUTLINE DRAWING FOR REFERENCE ONLY

DRAWN:	T.Shihua 09/07/15
ENGINEER:	C.Tao 09/07/15
APPROVED:	W.Qiang 09/07/15

TOLERANCES UNLESS OTHERWISE SPEFICIED
X ±0.50
.X ±0.20
.XX ±0.10
ANGLES ±1°

TITLE:
RF Adaptor
BNC Male to SMA Female Adaptor

PART NO: BNC/SMA-JK

www.t-rely.com.cn

DIMENSION IN MILLIMETERS (mm)

SIZE:	SCALE:	SHEET:	REV:
A4	N/A	1/1	A