This document contains proprietary information and such informationmay not be disclosed to others for any purposes, not used for sales/marketing/procurement purposes without written permission

REV	DESCRIPTION OF REVISION	ECN NO.	BY	DATE	APPROVED
A	New Release	———	T.Shihua	29/04/21	29/04/21

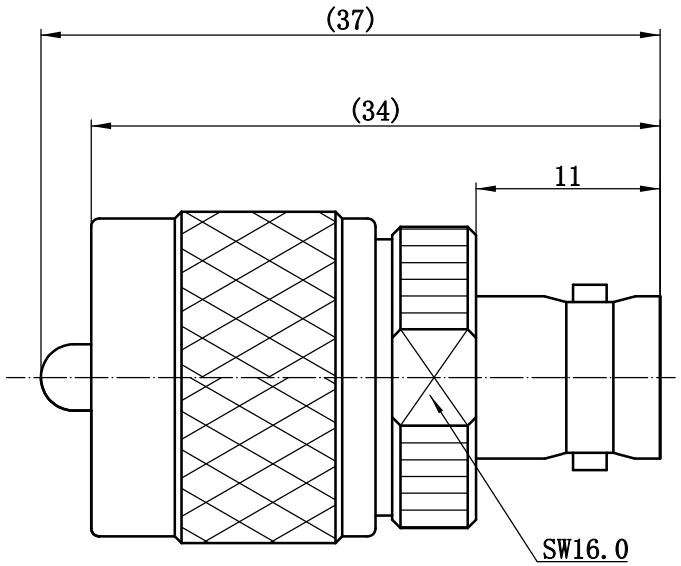

1 Electrical电气性能

1.1 Impedance特性阻抗: 50Ω
1.2 Frequency频率范围: DC～300MHz
1.3 VSWR电压驻波比:≤1.30
1.4 Insertion Loss(dB):≤0.05xSqt.(f_GHz)
1.5 Insulation resistance绝缘电阻: ≥5000MΩ
1.6 Dielectric withstanding voltage介质耐压: 1500V

2 Environmental&Mechanical环境&机械性能

2.1 Temperature range温度范围: -55℃～+125℃
2.2 RoHs Compliant 符合RoHs
2.3 Durability寿命: >500 cycles（次）

3 Materials&Finish材料&涂镀

3.1 Body外壳:Brass,nickel plated 黄铜,镀镍
3.2 Insulator 绝缘介质:Teflon 聚四氟乙烯
3.3 Contact Pin中心导体:Bronze,Gold plated 锡青铜,镀金
3.4 Coupling Nut连接螺套:Brass,nickel plated 黄铜,镀镍

Notes:

1. ALL SPECIFICATIONS ARE SUBJECT TO CHANGE NOTICE AT ANY TIME
2. CUSTOMER OUTLINE DRAWING FOR REFERENCE ONLY

DRAWN: T.Shihua 29/04/21	TITLE: RF Adaptor UHF Male to BNC Female Adaptor				
ENGINEER: C.Tao 29/04/21					
APPROVED: W.Qiang 29/04/21					
TOLERANCES UNLESS OTHERWISE SPEFICIED X ±0.50 .X ±0.20 .XX ±0.10 ANGLES ±1°	PART NO: UHF/BNC-JK	SIZE: A4	SCALE: N/A	SHEET: 1/1	REV: A

www.rf-connector-china.com

DIMENSION IN MILLIMETERS (mm)