This document contains proprietary information and such informationmay not be disclosed to others for any purposes,
not used for sales/marketing/procurement purposes without written permission

REV	DESCRIPTION OF REVISION	ECN NO.	BY	DATE	APPROVED
A	Initial Release	———	T.Shihua	1/8/14	1/8/14

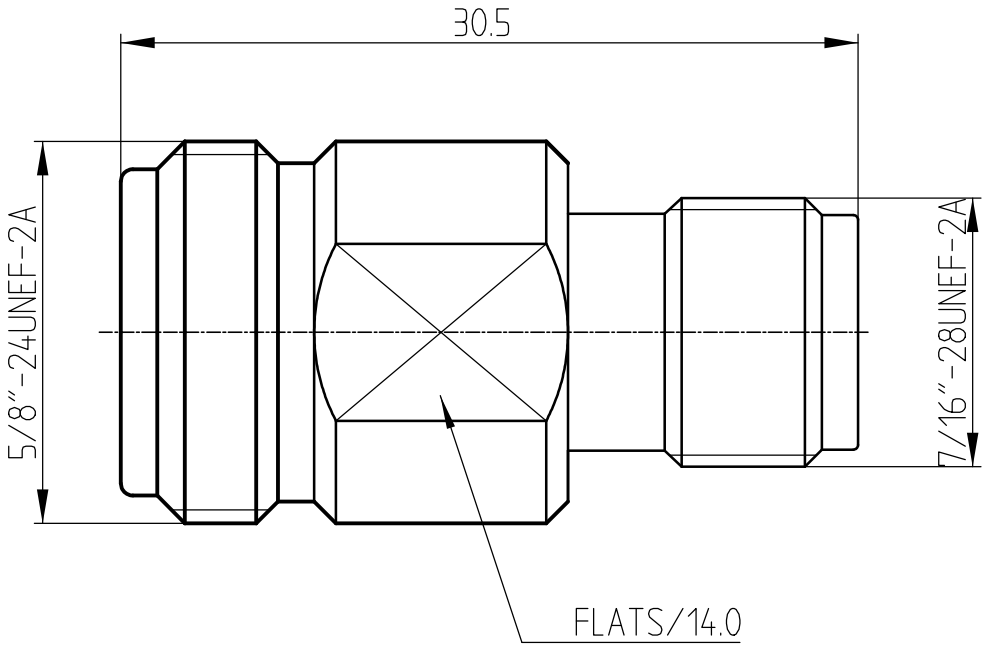

1 Electrical
1.1 Impedance: 50 Ω
1.2 Frequency: DC-18GHz
1.3 VSWR: 1.25:1

2 Mechanical&Environmental
2.1 Temperature range -45°C ~+125°C
2.2 Durability(matings) >500
2.3 RoHs Compliant Yes

3 Material&Finish
3.1 Pin contact: Beryllium-Copper, gold plated
3.2 Body: Stainless Steel(SU303), Passivated
3.3 Insulators: PEI

4 Interface Standards
4.1 TNC MIL-STD-348A
4.2 N MIL-STD-348A

Notes:
1. ALL SPECIFICATIONS ARE SUBJECT TO CHANGE NOTICE AT ANY TIME
2. CUSTOMER OUTLINE DRAWING FOR REFERENCE ONLY

DRAWN: T.Shihua 1/8/14	TITLE: Precision Adapter N Female to TNC Female				
ENGINEER: C.Tao 1/8/14					
APPROVED: W.Qiang 1/8/14					
TOLERANCES UNLESS OTHERWISE SPEFICIED X ±0.50 .X ±0.20 .XX ±0.10 ANGLES ±1°	PART NO: N/TNC-KKG	SIZE: A4	SCALE: N/A	SHEET: 1/1	REV: A

www.teruilai.com

DIMENSION IN MILLIMETERS (mm)