This document contains proprietary information and such informationmay not be disclosed to others for any purposes,
not used for sales/marketing/procurement purposes without written permission

REV	DESCRIPTION OF REVISION	ECN NO.	BY	DATE	APPROVED
A	Initial Release	———	T.Shihua	17/12/14	17/12/14

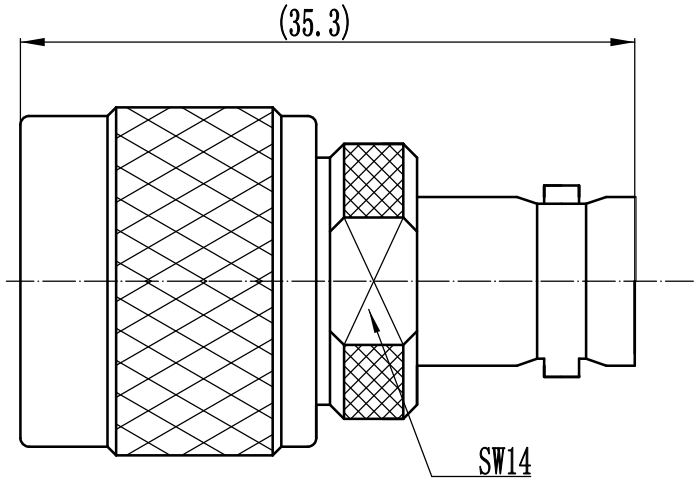

1 Electrical
1.1Impedance: 50 Ω
1.2Frequency:DC~4GHz
1.3 VSWR: 1.30:1

2 Environmental
2.1 Temperature -45° to 125°
2.2 RoHs compliant

3 Material&Finish
3.1 Inner Contact: Phosphor Bronze, gold plated
3.2 Outer Contact: brass, nickel plated
3.3 Insulators: PTFE
3.4 O-Ring: Silicon Rubber (red color)
3.5 Coupling Nut: Brass, nickel plated

Notes:
1. ALL SPECIFICATIONS ARE SUBJECT TO CHANGE NOTICE AT ANY TIME
2. CUSTOMER OUTLINE DRAWING FOR REFERENCE ONLY

DRAWN: T.Shihua 17/12/14
ENGINEER: C.Tao 17/12/14
APPROVED: W.Qiang 17/12/14
TOLERANCES UNLESS OTHERWISE SPEFICIED
X ±0.50
.X ±0.20
.XX ±0.10
ANGLES ±1°

TITLE:
RF Coaxial Connector
N Male to BNC Female adapter

www.t-rely.com.cn
DIMENSION IN MILLIMETERS (mm)

PART NO:	SIZE:	SCALE:	SHEET:	REV:
N/BNC-JK	A4	N/A	1/1	A