This document contains proprietary information and such informationmay not be disclosed to others for any purposes, not used for sales/marketing/procurement purposes without written permission

REV	DESCRIPTION OF REVISION	ECN NO.	BY	DATE	APPROVED
A	Initial Release	———	T. Shihua	24/08/19	24/08/19

1 Electrical
1.1 Impedance: 50 Ω
1.2 Frequency: DC-6GHz
1.3 VSWR: 1.25:1

2 Mechanical&Environmental
2.1 Temperature range -45°C ~+85°C
2.2 Durability(matings) >500
2.3 RoHs Compliant Yes

3 Material&Finish
3.1 Pin contact: Brass, gold plated
3.2 Body: Stainless Steel(SU303), Passivated
3.3 Insulators: Teflon

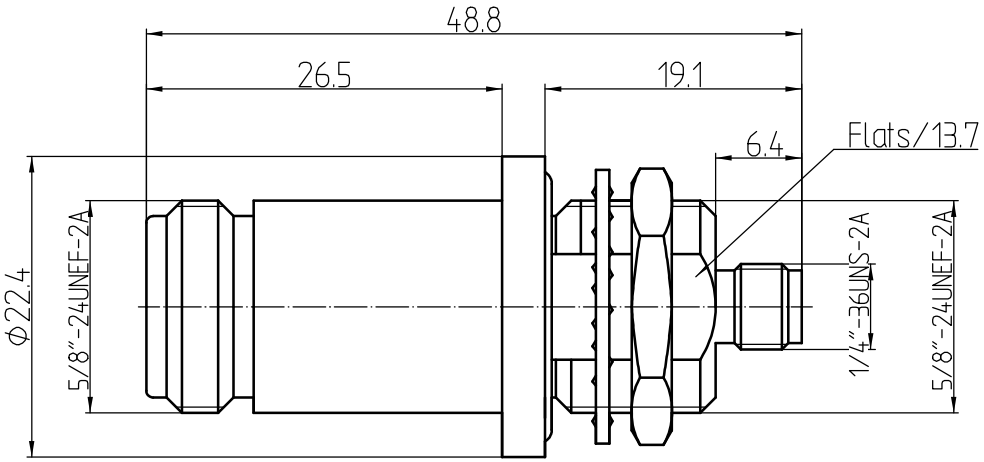

Notes:

1. ALL SPECIFICATIONS ARE SUBJECT TO CHANGE NOTICE AT ANY TIME
2. CUSTOMER OUTLINE DRAWING FOR REFERENCE ONLY

DRAWN: T. Shihua 24/08/19
ENGINEER: C. Tao 24/08/19
APPROVED: W. Qiang 24/08/19

TOLERANCES UNLESS OTHERWISE SPEFICIED
X ±0.50
.X ±0.20
.XX ±0.10
ANGLES ±1°

TITLE:
Precision Adapter
N Female to SMA Female
B/H Adaptor

PART NO: N/SMA-KYKAG

www.trl-rf.com

DIMENSION IN MILLIMETERS (mm)

SIZE:	SCALE:	SHEET:	REV:
A4	N/A	1/1	A