This document contains proprietary information and such informationmay not be disclosed to others for any purposes, not used for sales/marketing/procurement purposes without written permission

REV	DESCRIPTION OF REVISION	ECN NO.	BY	DATE	APPROVED
A	Initial Release	———	T. Shihua	1/8/14	1/8/14

1 Electrical

1.1 Impedance: 50 Ω

1.2 Frequency: DC-18GHz

1.3 VSWR: 1.25:1

2 Mechanical&Environmental

2.1 Temperature range -45°C ~+85°C

2.2 Durability(matings) >500

2.3 RoHs Compliant Yes

3 Material&Finish

3.1 Pin contact: Beryllium-Copper, gold plated

3.2 Body: Brass Gold plated

3.3 Insulators: Teflon

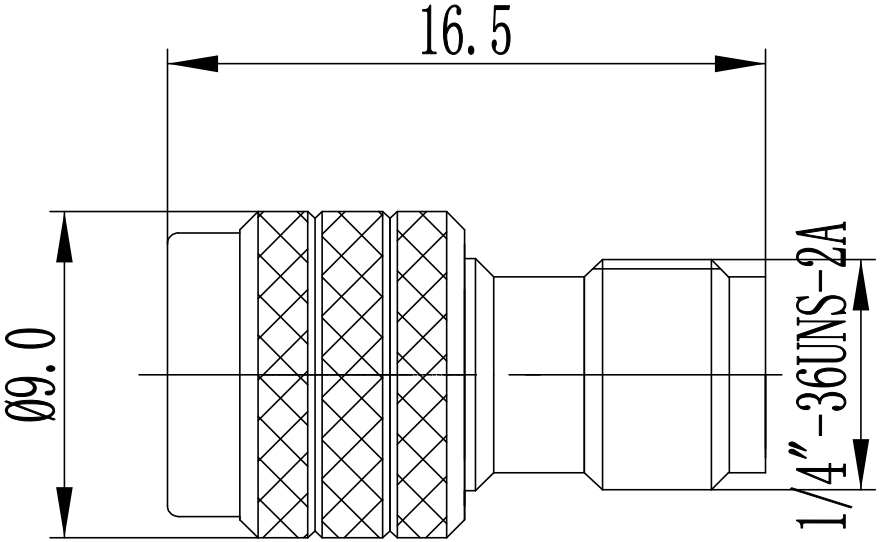

Notes:

1. ALL SPECIFICATIONS ARE SUBJECT TO CHANGE NOTICE AT ANY TIME

2. CUSTOMER OUTLINE DRAWING FOR REFERENCE ONLY

DRAWN: T. Shihua 1/8/14

ENGINEER: C. Tao 1/8/14

APPROVED: W. Qiang 1/8/14

TOLERANCES UNLESS OTHERWISE SPEFICIED
X ±0.50
.X ±0.20
.XX ±0.10
ANGLES ±1°

TITLE:

Precision Adapter

Quick SMA Male to SMA Female

PART NO: QSMA-JK

www.teruilai.com

DIMENSION IN MILLIMETERS (mm)

SIZE:	SCALE:	SHEET:	REV:
A4	N/A	1/1	A