This document contains proprietary information and such informationmay not be disclosed to others for any purposes, not used for sales/marketing/procurement purposes without written permission

REV	DESCRIPTION OF REVISION	ECN NO.	BY	DATE	APPROVED
A	Initial Release	———	T. Shihua	28/02/17	28/02/17

1 Electrical

1.1 Impedence	50 Ω
1.2 Frequency	DC-300MHz
1.3 Dielectric withstanding voltage	5KV rms,
1.4 Working voltage(at sea level)	1.6KV rms,
1.5 Insulation resistance	≥5000·10³ MΩ
1.3 Center contact resistance	≤ 2MΩ
1.4 Outer contact resistance	≤ 1MΩ
1.5 Corona extinction voltage (at 21000 m)	≥300V rms
1.9 Current rating continuous	≤ 10A

2 Environmental&Mechanical

2.1 Temperature range	-55℃~155℃
2.2 RoHs Compliant	
2.3 Durability	>500 cycles

3 Materials&Finish

3.1 Body:	Brass, Nickel plated
3.2 Insulator:	Teflon
3,3 Contact Pin:	Phosphor bronze, gold plated
3.4 Washer:	Beryllium, nickel plated
3.5 Nut:	copper, nickel plated

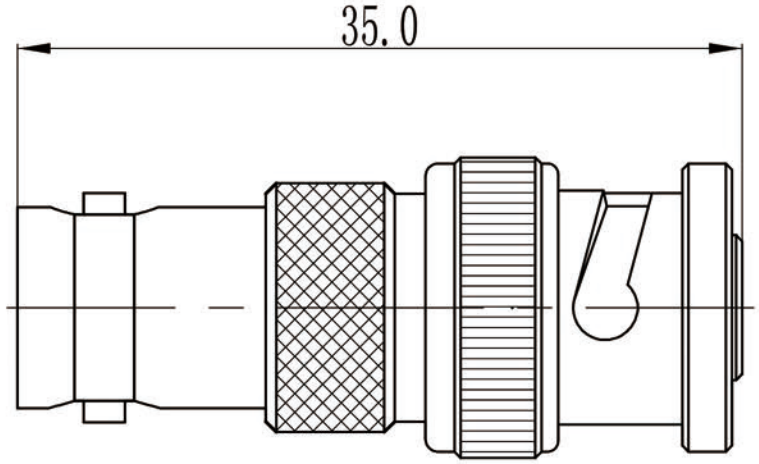

Notes:

1. ALL SPECIFICATIONS ARE SUBJECT TO CHANGE NOTICE AT ANY TIME
2. CUSTOMER OUTLINE DRAWING FOR REFERENCE ONLY

DRAWN: T. Shihua 28/02/17
ENGINEER: C. Tao 28/02/17
APPROVED: W. Qiang 28/02/17

TOLERANCES UNLESS OTHERWISE SPEFICIED
X ±0.50
.X ±0.20
.XX ±0.10
ANGLES ±1°

TITLE:
RF Adaptor
SHV Male to MHV Male

PART NO: SHV/MHV-JJ

www.rf-connector-china.com.

DIMENSION IN MILLIMETERS (mm)

SIZE:	SCALE:	SHEET:	REV:
A4	N/A	1/1	A