REV	DESCRIPTION OF REVISION	ECN NO.	BY	DATE	APPROVED
A	Initial Release	———	T.Shihua	25/06/19	25/06/19

This document contains proprietary information and such informationmay not be disclosed to others for any purposes, not used for sales/marketing/procurement purposes without written permission

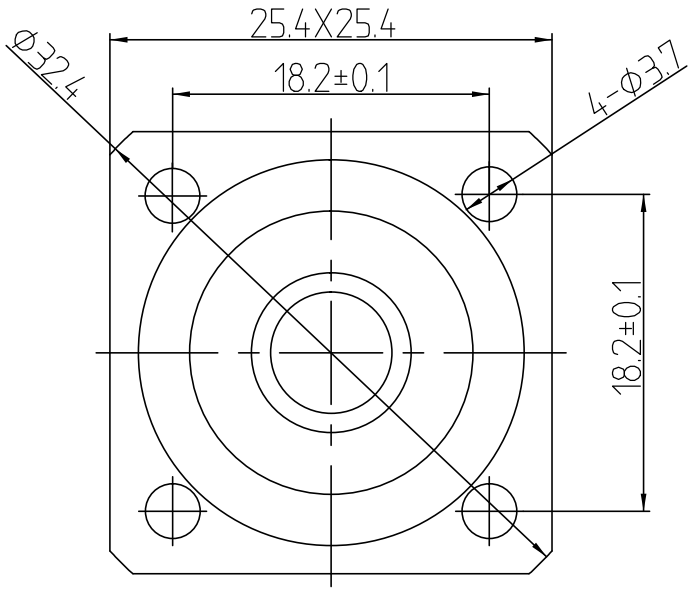

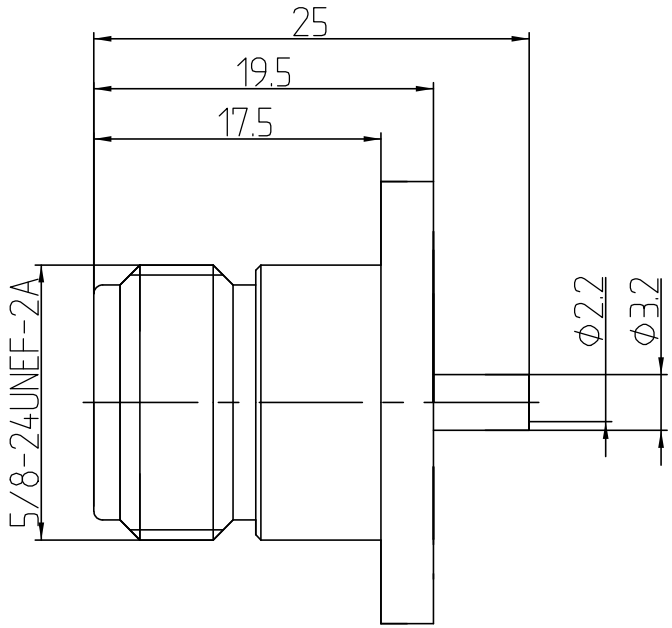

1 Electrical

1.1 Impedence	50Ω
1.2 Frequency	DC~6GHz
1.3 Dielectric withstanding voltage	1500V(volts RMS)
1.4 Center contact resistance	≤ 1MΩ
1.5 Outer contact resistance	≤ 0.2MΩ
1.6 Insulation resistance:	≥5000MΩ
1.7 VSWR	1.3:1

2 Environmental&Mechanical

2.1 Temperature range	-45℃~125℃
2.2 RoHs Compliant	
2.3 Durability	>500 cycles

3 Materials&plating

3.1 Body:	Brass, nickel plated
3.2 Insulator:	Teflon
3,3 Contact Pin:	Bronze, Gold plated

Notes:

1. ALL SPECIFICATIONS ARE SUBJECT TO CHANGE NOTICE AT ANY TIME
2. CUSTOMER OUTLINE DRAWING FOR REFERENCE ONLY

DRAWN: T.Shihua 25/06/19

ENGINEER: C.Tao 25/06/19

APPROVED: W.Qiang 25/06/19

TOLERANCES UNLESS OTHERWISE SPEFICIED
X ±0.50
.X ±0.20
.XX ±0.10
ANGLES ±1°

TITLE:
RF Coaxial Connector

N female Flange Conn. For .086 Cable

PART NO: N-KFB2FB

TRL
www.trl-rf.com

DIMENSION IN MILLIMETERS (mm)

SIZE:	SCALE:	SHEET:	REV:
A4	N/A	1/1	A