REV	DESCRIPTION OF REVISION	ECN NO.	BY	DATE	APPROVED
A	Initial Release	———	T.Shihua	21/11/17	21/11/17

This document contains proprietary information and such informationmay not be disclosed to others for any purposes, not used for sales/marketing/procurement purposes without written permission

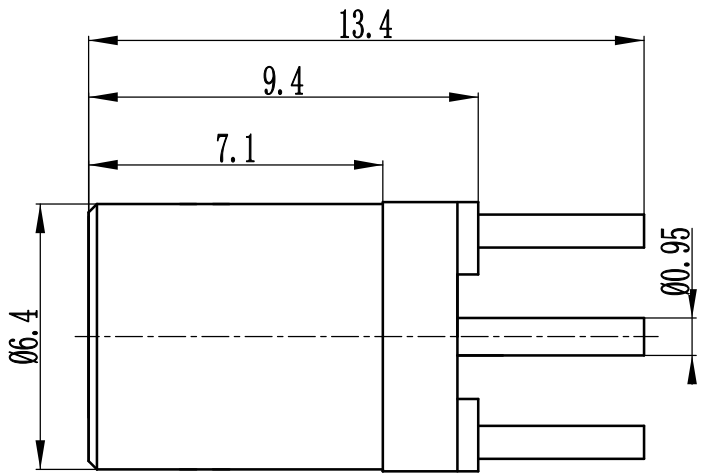

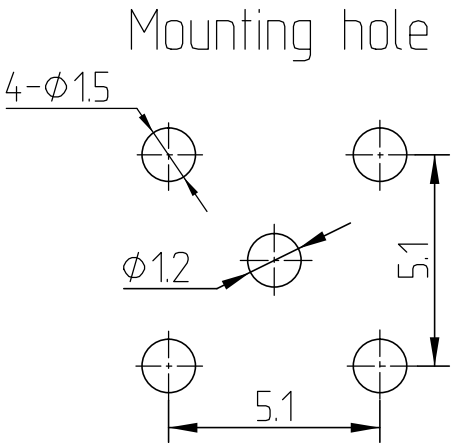

1 Electrical

1.1 Impedance:	50Ω
1.2 Frequency:	0~4GHz
1.3 Working voltage:	≤335V
1.4 Insulation resistance:	≥1000MΩ
1.5 Dielectric strength:	750V
1.6 VSWR	1.30:1

2 Environmental&Mechanical

2.1 Temperature range	-45℃~85℃
2.2 RoHs Compliant	
2.3 Durability	500 cycles

3 Materials&plating

3.1 Inner Contact:	Beryllium copper, gold plating
3.1 Outer Contact:	brass, gold plated
3.3 Insulators:	Teflon

Notes:

1. ALL SPECIFICATIONS ARE SUBJECT TO CHANGE NOTICE AT ANY TIME
2. CUSTOMER OUTLINE DRAWING FOR REFERENCE ONLY

DRAWN: T.Shihua 21/11/17

ENGINEER: C.Tao 21/11/17

APPROVED: W.Qiang 21/11/17

TOLERANCES UNLESS OTHERWISE SPEFICIED
X ±0.50
.X ±0.20
.XX ±0.10
ANGLES ±1°

TITLE:

RF Coaxial Connector

SMB Female Straight connector For PCB

PART NO: SMB-KHD6

TRL www.trl-rf.com

DIMENSION IN MILLIMETERS (mm)

SIZE:	SCALE:	SHEET:	REV:
A4	1:1	1/1	A