REV	DESCRIPTION OF REVISION	ECN NO.	BY	DATE	APPROVED
A	Initial Release	———	T.Shihua	18/7/13	18/7/13

This document contains proprietary information and such informationmay not be disclosed to others for any purposes, not used for sales/marketing/procurement purposes without written permission

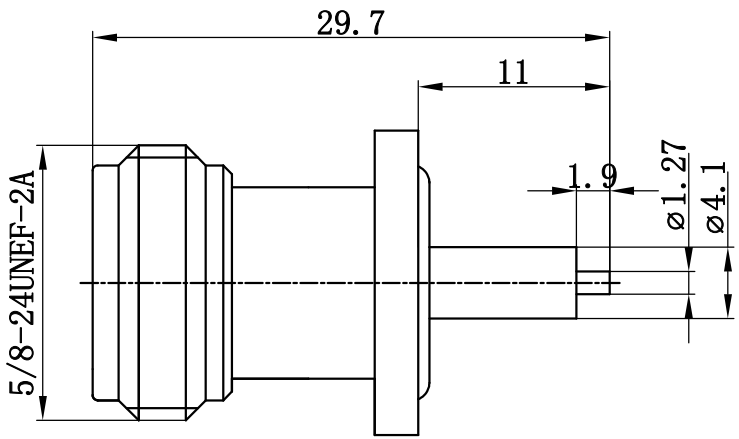

1 Electrical

1.1 Impedence	50Ω
1.2 Frequency	DC～11GHz
1.3 VSWR	≤1.25@6GHz

2 Environmental&Mechanical

2.1 Temperature range	-55℃～155℃
2.2 RoHs Compliant	
2.3 Durability	>500 cycles

3 Materials&Finish

3.1 Body:	Brass, Nickel plated
3.2 Insulator:	Teflon
3,3 Contact Pin:	Bronze, Gold plated
3.4 Gasket:	Silicon Rubber(red color)

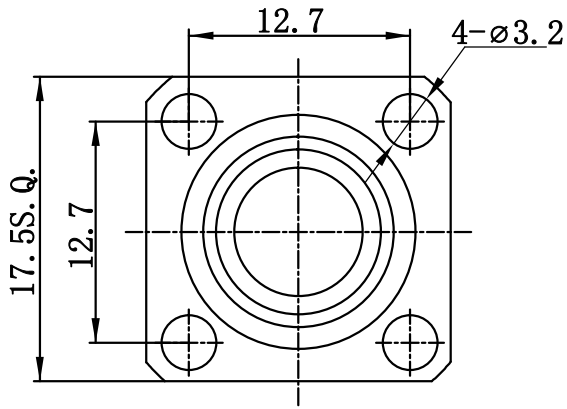

Notes:

1. ALL SPECIFICATIONS ARE SUBJECT TO CHANGE NOTICE AT ANY TIME
2. CUSTOMER OUTLINE DRAWING FOR REFERENCE ONLY

DRAWN: T.Shihua 18/07/13
ENGINEER: C.Tao 18/07/13
APPROVED: W.Qiang 18/07/13

TOLERANCES UNLESS OTHERWISE SPEFICIED
X ±0.50
.X ±0.20
.XX ±0.10
ANGLES ±1°

TITLE:
RF Coaxial Connector
N female Flange Conn. Terminal

PART NO: N-KFD92-1-F

www.teruilai.com

DIMENSION IN MILLIMETERS (mm)

SIZE:	SCALE:	SHEET:	REV:
A4	N/A	1/1	A