REV	DESCRIPTION OF REVISION	ECN NO.	BY	DATE	APPROVED
A	Initial Release	———	T. Shihua	18/7/07	18/7/07

This document contains proprietary information and such informationmay not be disclosed to others for any purposes, not used for sales/marketing/procurement purposes without written permission

1 Electrical

1.1 Impedence	50 Ω
1.2 Frequency	DC-3GHz
1.3 Dielectric withstanding voltage	1500V(volts RMS)
1.4 Center contact resistance	≤ 1M Ω
1.5 Outer contact resistance	≤ 0.2M Ω
1.6 Insulation resistance:	≥5000M Ω

2 Environmental&Mechanical

2.1 Temperature range	-45℃～125℃
2.2 RoHs Compliant	
2.3 Durability	>500 cycles

3 Materials&plating

3.1 Body:	Brass, nickel plated
3.2 Insulator:	Teflon
3,3 Contact Pin:	Brass, Gold plated
3.4 Coupling Nut:	Brass, nickel plated
3.5 Gasket:	Silicon rubber (red color)
3.6 Spring:	Phosphor bronze, nickel plated

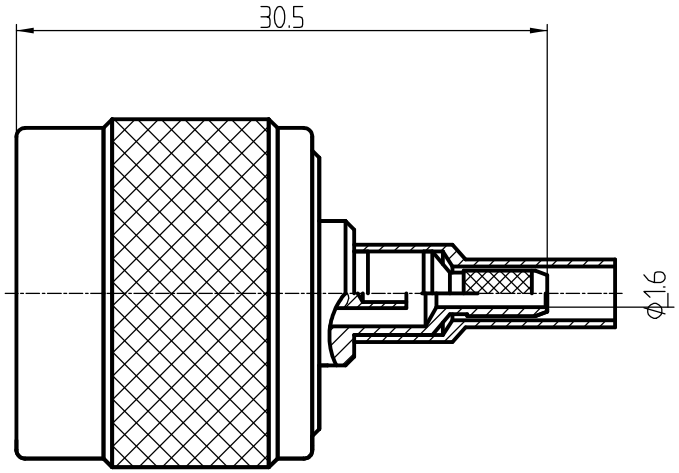

Notes:

1. ALL SPECIFICATIONS ARE SUBJECT TO CHANGE NOTICE AT ANY TIME
2. CUSTOMER OUTLINE DRAWING FOR REFERENCE ONLY

DRAWN: T. Shihua 18/07/07
ENGINEER: C. Tao 18/07/07
APPROVED: W. Qiang 18/07/07

TOLERANCES UNLESS OTHERWISE SPEFICIED
X ±0.50
.X ±0.20
.XX ±0.10
ANGLES ±1°

TITLE:
RF Coaxial Connector
N Male Conn. For RG316 Cable
Sky Window

PART NO: N-J3CY

www.teruilai.com

DIMENSION IN MILLIMETERS (mm)

SIZE:	SCALE:	SHEET:	REV:
A4	N/A	1/1	A